OD7025-12HHB10A

DC Fan, 12VDC
70x25mm (2.76x1.0in)

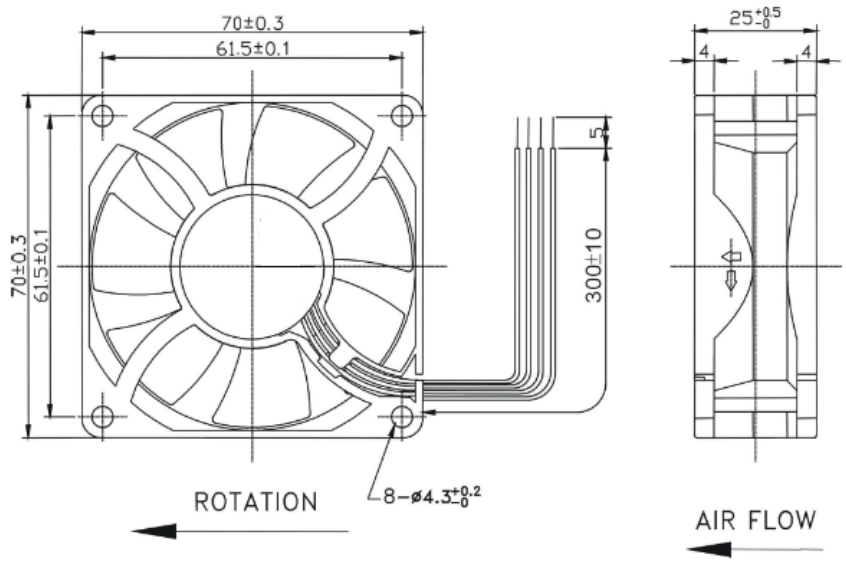

Frame & Impeller	PBT, UL94V-0 plastic
Connection	4x Lead wires *
Motor	Brushless DC, auto restart, polarity protected.
Bearing System	Dual ball bearing
Insulation Resistance	Min. 10M at 500VDC
Dielectric Strength	1 second at 500VAC max leakage 500 microamp
Temperature Range	-10C ~ +70C
Storage Temperature	-40C ~ +80C
Life (L10)	70,000 hours (40C)

Available Options

IP55
Other speeds and voltages
Alarm

*Connection:
Wire Leads - UL1061
26AWG Red(+), Black (-),
White Tachometer,
Blue PWM

Weight: 90 g

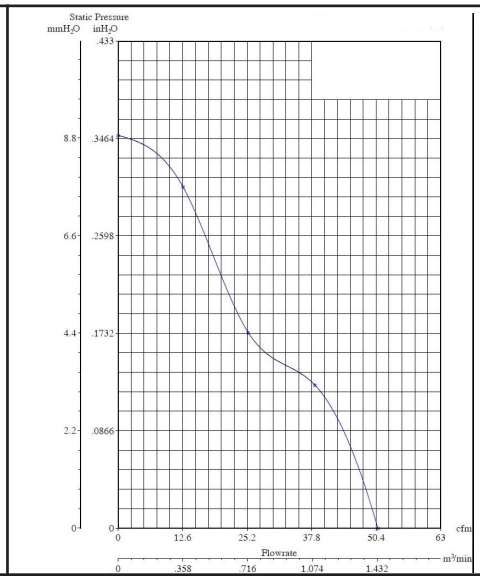

Model Number	OD7025-12HHB10A
Part Number	114151261
Nominal Voltage	12 VDC
Voltage Range	7~13.2 VDC
Nominal Current	.33 A
Rated Power	5.04 Watts
Rated Speed (RPM)	5000
Airflow (CFM)	51
Noise Level (dB)	46
Max. Static Pressure	.35 “H_2O

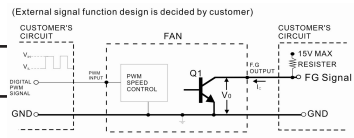

*TRANSISTOR Q1 AT "ON" POSITION
COLLECTOR CURRENT----------I_C =10mA MAX
SATURATION VOLTAGE----------V_{CE}=1 V MAX
*TRANSISTOR Q1 AT "OFF" POSITION
RELEASE VOLTAGE----------V_{CE}=15 V MAX
*DIGITAL PWM SPEED CONTROL POSITION
PWM INPUT VOLTAGE HIGH----------V_{IH}=5.5 V MAX
PWM INPUT VOLTAGE LOW----------V_{IL} = 0.5 V MAX
*PWM INPUT FREQUENCY----------FPWM:18KHZ~30KHZ

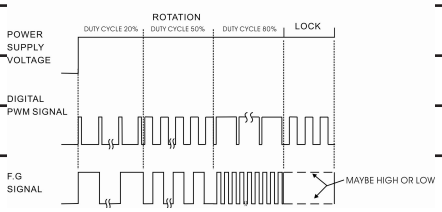

Knight Electronics, Inc.
10557 Metric Drive
Dallas, Texas 75243
214-340-0265

Orion Fans
Information and data is subject to change without prior notification.